Standard Particulate Filter - P33

Symbols

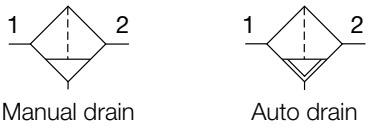

- Integral 1/2" or 3/4" ports (NPT & BSPP)
- High efficiency 5 micron element as standard
- Excellent water removal efficiency
- Robust but lightweight aluminum construction
- Positive bayonet latch to ensure correct & safe fitting

Options:

P33FA [ ] [ ] **E** [ ] [ ] **N**

Basic series	
Global modular standard particulate filter	P33FA

Thread type	
BSPP	1
NPT	9

Port size	
1/2	4
3/4	6

Element	
5µ Element	E

Bowl type	
G	Poly bowl with bowl guard
S	Metal bowl with sight gauge

Drain type	
M	Manual drain
A	Auto drain

Mounting	
N	No bracket

Bold items are most common.

Port size	Description	Flow‡ dm^3/s (scfm)	Max. bar (psig)	Height mm (inches)	Width mm (inches)	Depth mm (inches)	Part number†
1/2"	Poly bowl - manual drain	40 (85)	10 (150)	213 (8.39)	73 (2.87)	73 (2.87)	**P33FA14EGMN**
1/2"	Poly bowl - auto drain	40 (85)	10 (150)	207 (8.15)	73 (2.87)	73 (2.87)	**P33FA14EGAN**
1/2"	Metal bowl - manual drain	40 (85)	17 (250)	213 (8.39)	73 (2.87)	73 (2.87)	**P33FA14ESMN**
1/2"	Metal bowl - auto drain	40 (85)	17 (250)	207 (8.15)	73 (2.87)	73 (2.87)	**P33FA14ESAN**
3/4"	Poly bowl - manual drain	48 (102)	10 (150)	213 (8.39)	73 (2.87)	73 (2.87)	**P33FA16EGMN**
3/4"	Poly bowl - auto drain	48 (102)	10 (150)	207 (8.15)	73 (2.87)	73 (2.87)	**P33FA16EGAN**
3/4"	Metal bowl - manual drain	48 (102)	17 (250)	213 (8.39)	73 (2.87)	73 (2.87)	**P33FA16ESMN**
3/4"	Metal bowl - auto drain	48 (102)	17 (250)	207 (8.15)	73 (2.87)	73 (2.87)	**P33FA16ESAN**

† **Standard part numbers shown in bold. For other models refer to Options chart above.**
‡ Flow with 6.3 bar (91.3 psig) inlet pressure and 0.34 (4.9 psig) pressure drop.

ARA® PNEUMATIK
ul. Wyścigowa 38, 53-012 Wrocław
tel. 71 364 72 82, ara@arapneumatik.pl
www.arapneumatik.pl

Specifications

Flow capacity*	1/2	40 dm³/s (85 scfm)
	3/4	48 dm³/s (102 scfm)
Operating temperature	Plastic bowl	-25°C to 52°C (-13°F to 125°F)
	Metal bowl	-25°C to 65.5°C (-13°F to 150°F)
Max. supply pressure	Plastic bowl	10 bar (150 psig)
	Metal bowl	17 bar (250 psig)
Standard filtration		5 micron
Useful retention†		85 cm³ (2.8 US oz.)
Port size	BSPP / NPT	1/2, 3/4
Weight		0.46 kg (1.01 lbs)

* Inlet pressure 6.3 bar (91.3 psig). Pressure drop 0.34 bar (4.9 psig).
† Useful retention refers to volume below the quiet zone baffle.

Air quality:
Within ISO 8573-1: 1991 Class 3 (Particulates)
Within ISO 8573-1: 2001 Class 6 (Particulates)

Material Specifications

Body		Aluminum
Body cap		ABS
Bowls	Plastic bowl	Polycarbonate
	Metal bowl	Aluminum
Bowl guard		Nylon
Deflector		Polypropylene
Element retainer / Baffle		Acetal
Filter element		Sintered polyethylene
Seals		Nitrile
Sight gauge	Metal bowl	Polycarbonate

Flow Charts

1/2 Filter

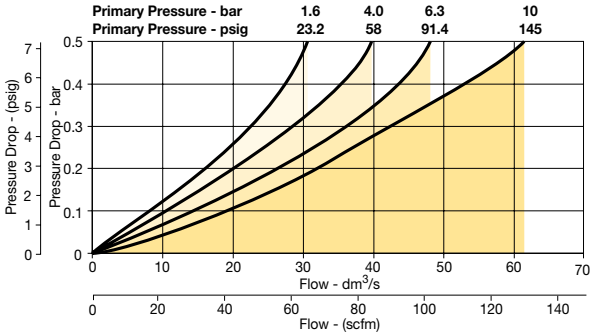

3/4 Filter

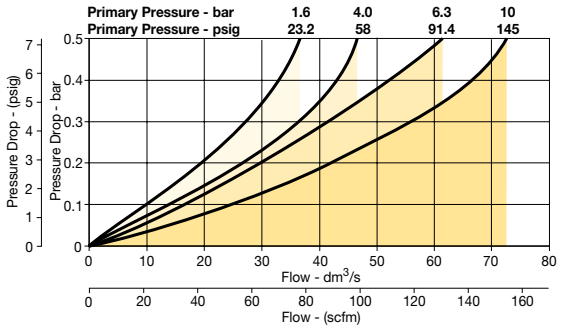

Dimensions mm (inches)

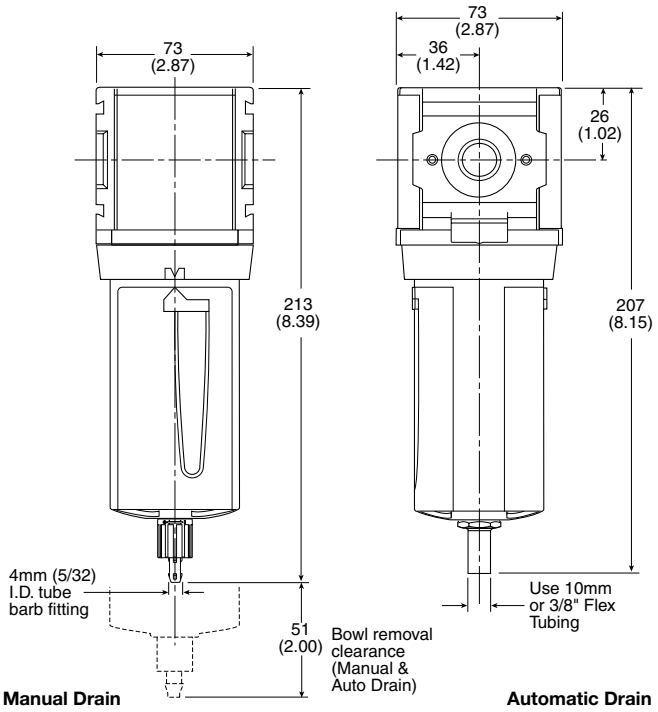

Repair and Service Kits

Plastic bowl / Bowl guard manual drain	**P33KA00BGM**
Metal bowl / Sight gauge manual drain	**P33KA00BSM**
Auto drain	**P32KA00DA**
5µ particle filter element	**P33KA00ESE**
L-bracket (fits to body)	**P33KA00ML**
T-bracket (fits to body connector)	**P32KA00MB**
T-bracket with body connector	**P33KA00MT**
Body connector	**P32KA00CB**